GRUPO CONJUNTO CESTO BLANCO

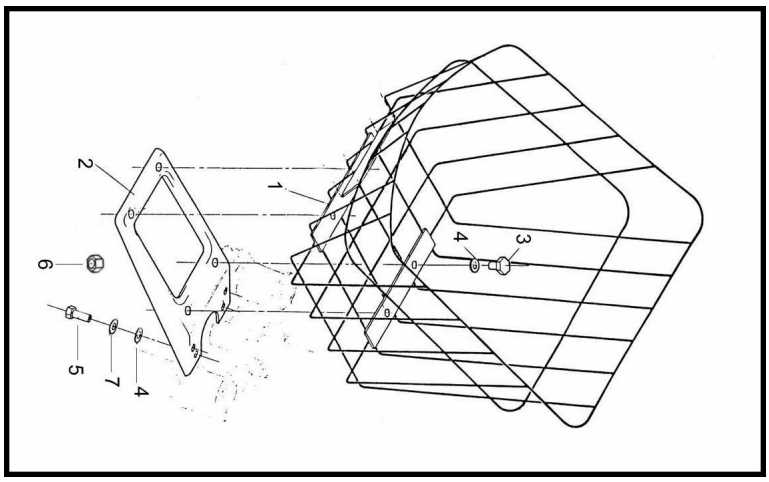

Rating: Not Rated Yet
Price:
Variant price modifier:

Base price with tax:

Price with discount:

Salesprice with discount:

Sales price:

Sales price without tax:

Discount:

Tax amount:

Ask a question about this product

Description

Ref.	Título	Código
1	Conjunto Cesto blanco	R230204101
2	Conjunto soporte cesto pintado	R280210912FN
3	TORNILLO CABEZA TANQUE M6 X 20	R100100025
4	ARANDELA PLANA Ø6	R100306
5	TORNILLO CABEZA HEXAGONAL M6 X 15	R501506
6	Tuerca hexagonal autobloqueante M6	R700314040
7	ARANDELA GROWER Ø 6	R200306