GRUPO MOTOR DE ARRANQUE

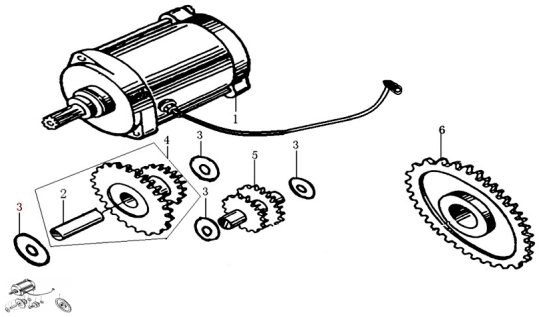

Rating: Not Rated Yet
Price:
Variant price modifier:

Base price with tax:

Price with discount:

Salesprice with discount:

Sales price:

Sales price without tax:

Discount:

Tax amount:

Ask a question about this product

Description

Ref.	Título	Código
1	MOTOR DE ARRANQUE	161-82200
2	RODAMIENTO AGUJA	161-21402
3	ARANDELA 10,5 X 0,5 X 18	161-93326
4	ENGRANAJE DOBLE Nº1	161-2140A
5	ENGRANAJE DOBLE Nº2	161-21401
6	ENGRANAJE EMBRAGUE DE ARRANQUE	161-2142A